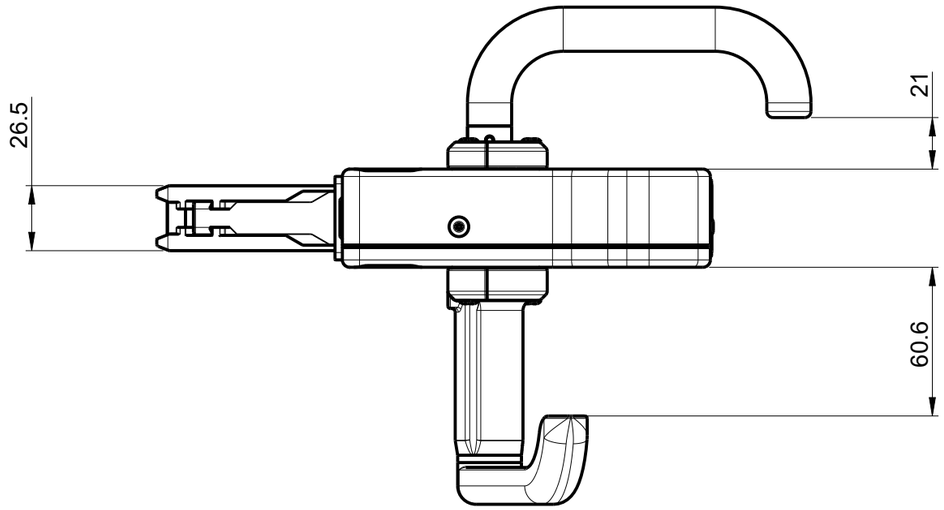

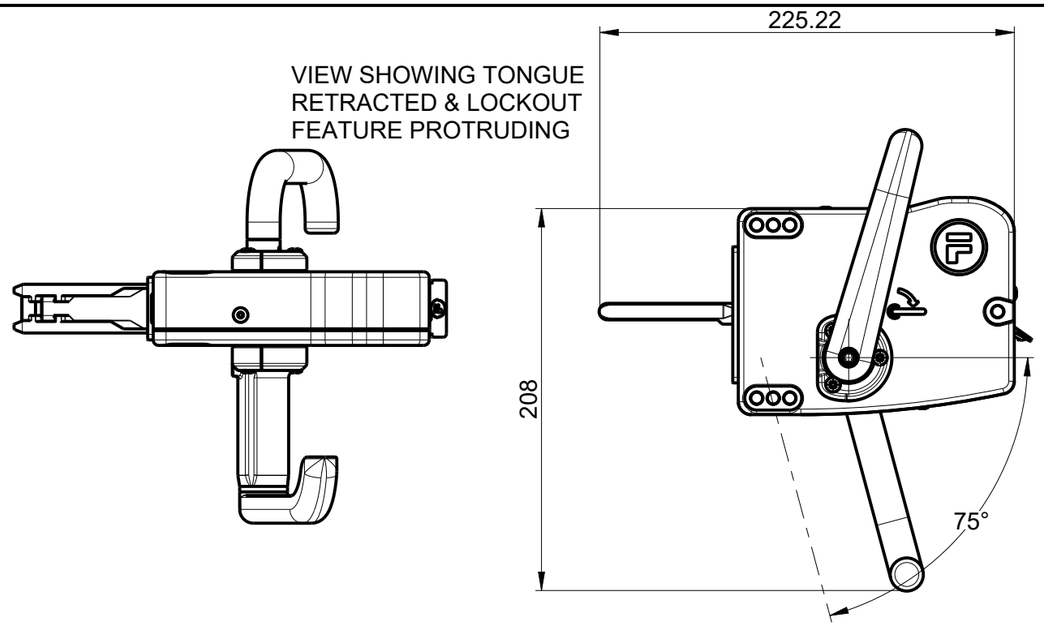

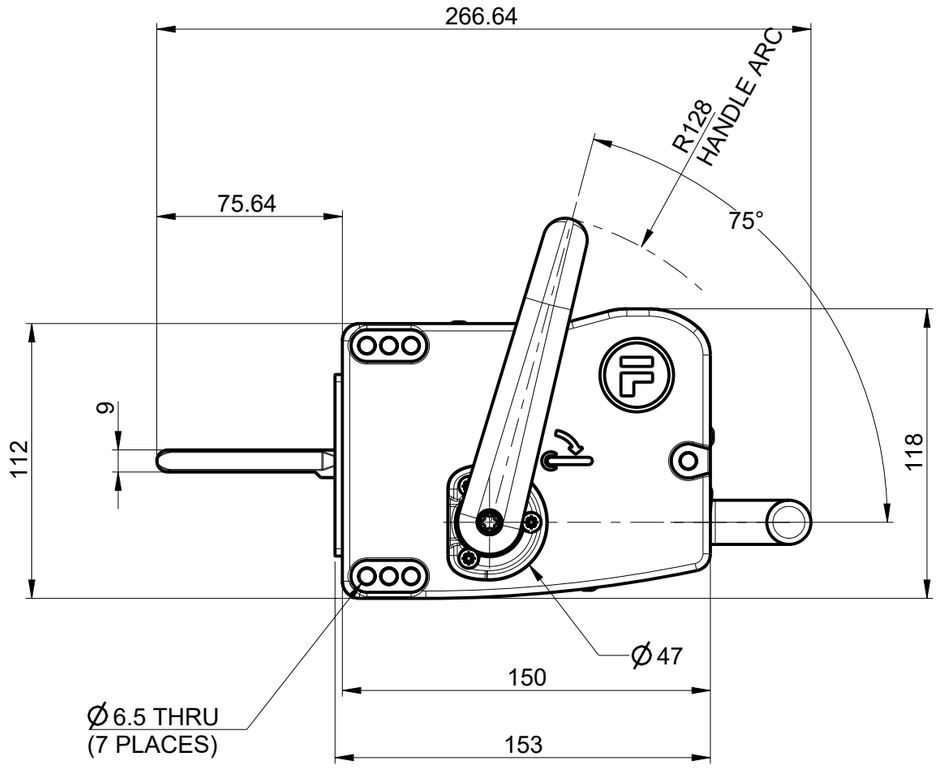

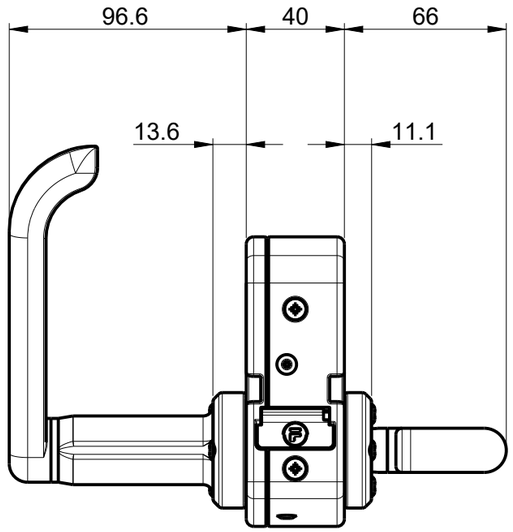

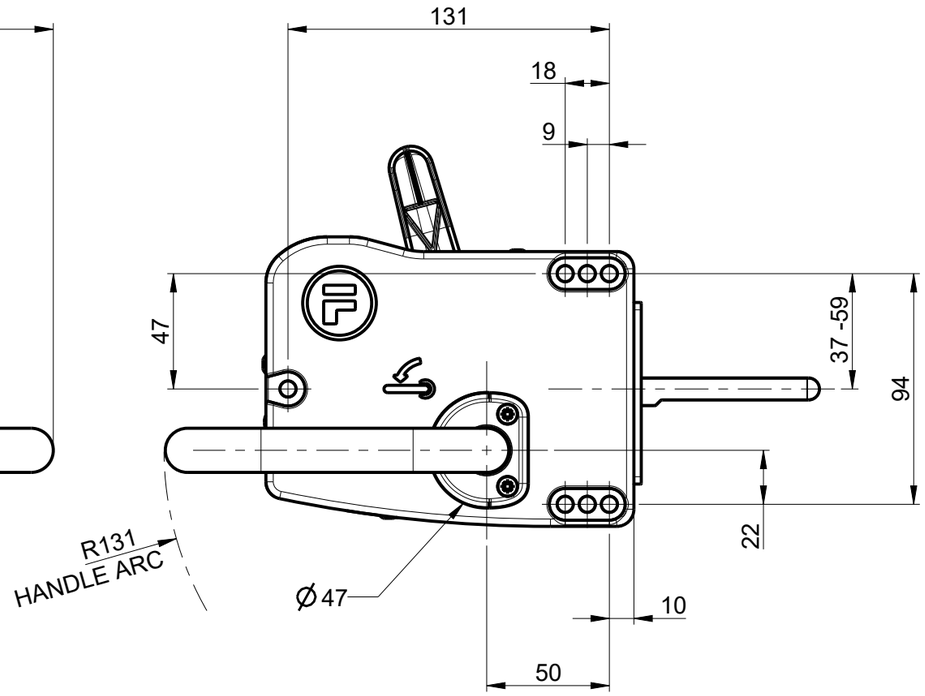

Fortress Interlocks

www.fortressinterlocks.com

EI2

proRELEASE SINGLE ACTION ESCAPE RELEASE HANDLE